MP SENSOR

ELECTRONIC PRESSURE & VACUUM SWITCH *Product category*

F08-M1

Type

-1...0 | -1...1 | -1...10 |0...10 | 0...12 BAR
-14.5...0 | -14.5...14.5 | -14.5...145 |0...145 | 0...174 PSI

DATA SHEET | *ENGLISH*

c UL US LISTED E511277 IO-Link LABS free CE

ELECTRICAL CONNECTION | **BODY** | **PROCESS CONNECTION**

Pin	Assignment
1	Ub+
3	0 V
4	OUT 1 / IO-Link
2	PROG

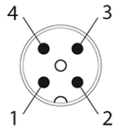

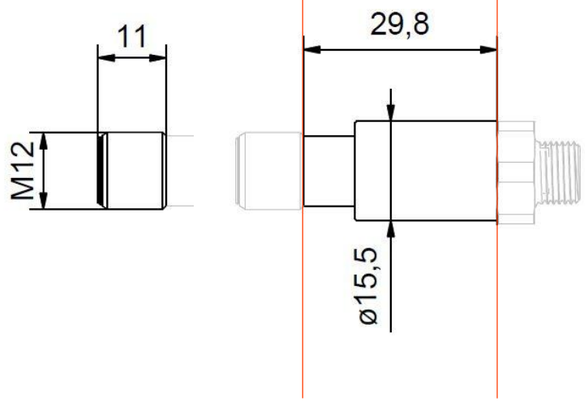

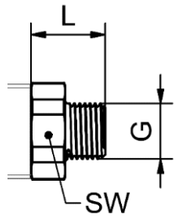

G	L	SW
G1/8“	13	16
G1/4“	18	17
G3/8“	16	19
NPT1/8“	13	16

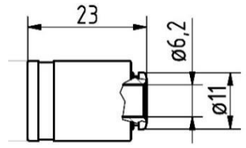

Push-in (6 mm)

General data

Setting options	Switch points; NO/NC; Hysteresis / window mode; On/Off Delay; Programming lock ex works
Operating medium	Filtered, dry or oiled air and non-corrosive gases
Protection class	IP65
MTTF (40°C)	820 years

Ordering information

1 - 03 - XX 02 - XX 3 X XX

Process connection

G1/8“	02
G1/4“	03
NPT1/8“	04
Push-in 6 mm	07
G3/8“	09

Output signal

1x PNP	01
1x NPN	on request

Firmware

Standard	00
Customized	>00

Pressure range

bar	psi	
-1...0	-14.5...0	1
-1...1	-14.5...14.5	2
-1...10	-14.5...145	3
0...10	0...145	4
0...12	0...174	5
-1...3	-14.5...43,5	6
0...0.25	0...3.62	7

Electrical data

Electrical connection	M12x1, 4-pole
Operating voltage	9...30 VDC (UL: class 2 source only)
Current consumption	< 20 mA
Short-circuit / reverse polarity protection	yes / yes

Output

Output signal	1x PNP (IO-Link is optionally available); 1x NPN (only without IO-Link)
Output voltage	approx. Ub -1.5 V
Max. output current	max. 250 mA each output
Output function	NO / NC (programmable)
Operating frequency	200 Hz
Capacitive load	200 nF
Response time	< 2,5 ms
Accuracy (23°C)	± 0,5% FS
max. temperature error	± 1,5% FS (-10°C...60°C)
Repeatability	± 0.2% FS
Long term drift	≤ 0,1% / a

IO-Link

IO-Link specification	Version 1.1
Transmission rate	COM 2 / 38.4 Kbit/s
Process data width	24 bit
Measurement information	16 bit
Switch point information	1 bit
Max. cycle time	5 msec

Mechanical data

Material housing	Stainless steel
Process connection	G1/8“; G1/4“; G3/8“; NPT1/8“; Push-in 6 mm
Material process connection	Brass nickel-plated
Mounting position	Any (port downwards when using oiled air)
Weight	28 g

Pressure range

Measuring range						
(bar)	0...0,25	-1...0	-1...1	-1...10	0...10	0...12
(psi)	0...3,62	-14.5...0	-14.5...14.5	-14.5...145	0...145	0...174
max. overpressure*						
(bar)	0,5	2		15		
(psi)	7,25	29		217.6		

Operating conditions

Operating temperature	Operation: -10°...+60°C (UL: 0°...+60°C) Storage: -20°...+85°C
EMC / interference immunity	EN61000-6-2
EMC / interference emission	EN61000-6-4
LABS conformity	VDMA 24364-B1/B2/C1-L/W
UL approval	E511277

* overpressure not continuously allowed

MP-Sensor GmbH · Albstr. 13 · 73765 Neuhausen · Phone +49 (0)7158 9878490 · info@mp-sensor.de · www.mp-sensor.com · Errors and omissions excepted